Work Order ID 71330

Tuesday, June 28, 2011 10:15:16 AM

Item ID: D3391-023 **Accept** **Setup Start**

Revision ID: **Stop**

Item Name: Mid Tube Assembly

Start Date: 6/28/2011 **Start Qty:** 1.00 **Cust Item ID:**

Required Date: 7/27/2011 **Req'd Qty:** 1.00 **Customer:**

Reference:

Approvals: **Process Plan:** MF **Date:** 11-06-28 **Tooling:** _____ **Date:** _____ **Run Start**

QC: _____ **Date:** _____ **SPC (Y/N):** _____ **Date:** _____ **Stop**

Sequence ID/ Work Center ID	Operation Description	Set Up/ Run Hours	Tool ID	Tool #	Plan Code	Accept Qty	Reject Qty	Reject Number	Insp. Stamp
Draw Nbr	**Revision Nbr**								
D3391	Rev H								
100	Skidtubes	0.00							
Skidtubes		0.00							
Skidtubes									

Memo

1-Cut tube to finish length as per Dwg D3391

2-Identify as D3391-023

3-Drill pilot holes using DT8796 (Do not drill "B" holes) and drill only 1 fwd saddle hole on one side only as per Dwg D3391

4-Open saddles and GHW holes to Ø0.375" exept for fwd saddle hole of detail "J"

5-Remove .030" from Fwd indexing Ridge as per Dwg D3391

6-Remove indexing ridge on Fwd & Aft end of skidtube as per Dwg D3391

7-Deburr

8-Drill #30 pilot holes using wearplate Jig DT8217 Identify Ø0.250" holes with paint marker,

9-Open wearplate holes of D3391-023 assembly detail section G-G to Ø0.250" (14 holes) as per Dwg D3391 and 2 holes in section Detail "J", do not open wearplate holes of section "J"

10-Open wearplate holes of D3391-023 assembly detail section H-H to Ø0.297" (20 holes) as per Dwg D3391

DL 11/06/30

Dart Aerospace Ltd

W/O:		WORK ORDER CHANGES					
DATE	STEP	PROCEDURE CHANGE	By	Date	Qty	Approval Chief Eng / Prod Mgr	Approval QC Inspector

Part No: _____ **PAR #:** _____ **Fault Category:** _____ **NCR:** Yes No **DQA:** _____ **Date:** _____

Resolution: _____ **Disposition:** _____ **QA: N/C Closed:** _____ **Date:** _____

NCR:		WORK ORDER NON-CONFORMANCE (NCR)						
DATE	STEP	Description of NC Section A	Corrective Action Section B			Verification Section C	Approval Chief Eng	Approval QC Inspector
			Initial Chief Eng	Action Description Chief Eng	Sign & Date			

NOTE: Date & initial all entries

H:\fFORMS\Quality Assurance\approved QA\NCRWO RevE

Work Order ID 71330

Tuesday, June 28, 2011 10:15:16 AM

Item ID: D3391-023 **Accept** **Setup Start**

Revision ID:

Item Name: Mid Tube Assembly **Stop**

Start Date: 6/28/2011 **Start Qty:** 1.00 **Cust Item ID:**

Required Date: 7/27/2011 **Req'd Qty:** 1.00 **Customer:**

Reference:

Approvals: **Process Plan:** _____ **Date:** _____ **Tooling:** _____ **Date:** _____ **Run Start**

QC: _____ **Date:** _____ **SPC (Y/N):** _____ **Date:** _____ **Stop**

Sequence ID/ Work Center ID	Operation Description	Set Up/ Run Hours	Tool ID	Tool #	Plan Code	Accept Qty	Reject Qty	Reject Number	Insp. Stamp
	11-Open .375" holes to .438", ***do not open fwd saddle holes***								
	12-Locate D3391-021 in D3391-023 at 9.00" (see view z-z)								
	13- Transfer drill one fwd saddle hole only to .188" dia, transfer drill all remaining fwd saddle holes using DT 8149 locating from previously drill .188" dia hole, using t-pins and clicos to ensure perfect allingment, open up previously tranfer drilled pilot holes in D3391-023/-021 to 0.438" dia. in D3391-021								
	14- Transfer drill 2 wearplate holes into D3391-021 using DT8217, locating from two previously drilled holes, drill remaining wearplate holes into D3391-021.								
	15- Locating from two fwd wearplate holes drilol remaining 6 wearplte holes in D3391-021 using DT8937								
	16- Open 2 fwd wearplate holes in D3391-023 to .250" dia.								
	17- counterbore two aft wearplate holes in D3391-021 as per dwg								
	18- Open 12 wearplate holes in D3391-021 to 0.297" dia.								
	19-Deburr and blow out all chips from inside tube								

DR 11/09/14

DP 11-9-15

Dart Aerospace Ltd

W/O:		WORK ORDER CHANGES					
DATE	STEP	PROCEDURE CHANGE	By	Date	Qty	Approval Chief Eng / Prod Mgr	Approval QC Inspector

Part No: _____ **PAR #:** _____ **Fault Category:** _____ **NCR:** Yes No **DQA:** _____ **Date:** _____

Resolution: _____ **Disposition:** _____ **QA: N/C Closed:** _____ **Date:** _____

NCR:		WORK ORDER NON-CONFORMANCE (NCR)						
DATE	STEP	Description of NC Section A	Corrective Action Section B			Verification Section C	Approval Chief Eng	Approval QC Inspector
			Initial Chief Eng	Action Description Chief Eng	Sign & Date			

NOTE: Date & initial all entries

H:\fFORMS\Quality Assurance\approved QA\NCRWO RevE

Work Order ID 71330

Tuesday, June 28, 2011 10:15:17 AM

Item ID: D3391-023 **Accept** **Setup Start** **Stop**

Revision ID:

Item Name: Mid Tube Assembly

Start Date: 6/28/2011 **Start Qty:** 1.00 **Cust Item ID:**

Required Date: 7/27/2011 **Req'd Qty:** 1.00 **Customer:**

Reference:

Run Start **Stop**

Approvals: **Process Plan:** _____ **Date:** _____ **Tooling:** _____ **Date:** _____

QC: _____ **Date:** _____ **SPC (Y/N):** _____ **Date:** _____

Sequence ID/ Work Center ID	Operation Description	Set Up/ Run Hours	Tool ID	Tool #	Plan Code	Accept Qty	Reject Qty	Reject Number	Insp. Stamp
110	QC5- Inspect part completeness to step on W/O	0.00							
QC	Memo	0.00							
Quality Control									
120	Chemical Conversion Coat per QSI005 4.1	0.00							
HandFinish	Memo	0.00							
Hand Finishing									
130	QC3- Inspect Part Finish	0.00							
QC	Memo	0.00							
Quality Control									

Dart Aerospace Ltd

W/O:		WORK ORDER CHANGES					
DATE	STEP	PROCEDURE CHANGE	By	Date	Qty	Approval Chief Eng / Prod Mgr	Approval QC Inspector

Part No: _____ **PAR #:** _____ **Fault Category:** _____ **NCR:** Yes No **DQA:** _____ **Date:** _____

Resolution: _____ **Disposition:** _____ **QA: N/C Closed:** _____ **Date:** _____

NCR:		WORK ORDER NON-CONFORMANCE (NCR)						
DATE	STEP	Description of NC Section A	Corrective Action Section B			Verification Section C	Approval Chief Eng	Approval QC Inspector
			Initial Chief Eng	Action Description Chief Eng	Sign & Date			

NOTE: Date & initial all entries

H:\fFORMS\Quality Assurance\approved QA\NCRWO RevE

Work Order ID 71330

Tuesday, June 28, 2011 10:15:17 AM

Item ID: D3391-023 **Accept** **Setup Start**

Revision ID: **Stop**

Item Name: Mid Tube Assembly

Start Date: 6/28/2011 **Start Qty:** 1.00 **Cust Item ID:**

Required Date: 7/27/2011 **Req'd Qty:** 1.00 **Customer:**

Reference:

Approvals: **Process Plan:** _____ **Date:** _____ **Tooling:** _____ **Date:** _____ **Run Start**

QC: _____ **Date:** _____ **SPC (Y/N):** _____ **Date:** _____ **Stop**

Sequence ID/ Work Center ID	Operation Description	Set Up/ Run Hours	Tool ID	Tool #	Plan Code	Accept Qty	Reject Qty	Reject Number	Insp. Stamp
140	Skidtubes	0.00							
Skidtubes									
Skidtubes	**Memo**	0.00							
	1-Open float bag holes as per dwg 2-C'sink float bag holes as per dwg 3- Prepare tube for welding 4-Bond web in place as per Dwg D3391 & QSI 015. Adhere for 12 hours) A/R Sikaflex exp: 12-4-5 batch#: M118393								
150	QC5- Inspect part completeness to step on W/O	0.00				1	0	BE 11/09/21	
QC	**Memo**	0.00							
Quality Control									
160	Skidtubes	0.00				1	0	BEN/09/21	
Skidtubes									
Skidtubes	**Memo**	0.00							
	1-Weld crossbolt spacer as per dwg D3391 & QSI 004 2-grind weld flush A/R M118736								

11-9-19

Dart Aerospace Ltd

W/O:		WORK ORDER CHANGES					
DATE	STEP	PROCEDURE CHANGE	By	Date	Qty	Approval Chief Eng / Prod Mgr	Approval QC Inspector

Part No: _____ **PAR #:** _____ **Fault Category:** _____ **NCR:** Yes No **DQA:** _____ **Date:** _____

Resolution: _____ **Disposition:** _____ **QA: N/C Closed:** _____ **Date:** _____

NCR:		WORK ORDER NON-CONFORMANCE (NCR)						
DATE	STEP	Description of NC Section A	Corrective Action Section B			Verification Section C	Approval Chief Eng	Approval QC Inspector
			Initial Chief Eng	Action Description Chief Eng	Sign & Date			

NOTE: Date & initial all entries

H:\fFORMS\Quality Assurance\approved QA\NCRWO RevE

Work Order ID 71330

Tuesday, June 28, 2011 10:15:17 AM

Item ID: D3391-023 **Accept** **Setup Start** **Stop**

Revision ID:

Item Name: Mid Tube Assembly

Start Date: 6/28/2011 **Start Qty:** 1.00 **Cust Item ID:**

Required Date: 7/27/2011 **Req'd Qty:** 1.00 **Customer:**

Reference:

Run Start **Stop**

Approvals: **Process Plan:** _____ **Date:** _____ **Tooling:** _____ **Date:** _____

QC: _____ **Date:** _____ **SPC (Y/N):** _____ **Date:** _____

Sequence ID/ Work Center ID	Operation Description	Set Up/ Run Hours	Tool ID	Tool #	Plan Code	Accept Qty	Reject Qty	Reject Number	Insp. Stamp
170 QC Quality Control	QC10- Inspect visual per QSI004- ground welds **Memo**	0.00 0.00							
180 QC Quality Control	QC5- Inspect part completeness to step on W/O **Memo**	0.00 0.00				40			
185 HandFinish Hand Finishing	Pressure Wash per QSI005 4.3 **Memo** AND REALODINE AS PER PAR09-043	0.00 0.00							

IX Ø M-f 11/09/26

Dart Aerospace Ltd

W/O:		WORK ORDER CHANGES					
DATE	STEP	PROCEDURE CHANGE	By	Date	Qty	Approval Chief Eng / Prod Mgr	Approval QC Inspector

Part No: _____ **PAR #:** _____ **Fault Category:** _____ **NCR:** Yes No **DQA:** _____ **Date:** _____

Resolution: _____ **Disposition:** _____ **QA: N/C Closed:** _____ **Date:** _____

NCR:		WORK ORDER NON-CONFORMANCE (NCR)						
DATE	STEP	Description of NC Section A	Corrective Action Section B			Verification Section C	Approval Chief Eng	Approval QC Inspector
			Initial Chief Eng	Action Description Chief Eng	Sign & Date			

NOTE: Date & initial all entries

H:\fFORMS\Quality Assurance\approved QA\NCRWO RevE

Work Order ID 71330

Tuesday, June 28, 2011 10:15:17 AM

Item ID: D3391-023 **Accept** **Setup Start** **Stop**

Revision ID:

Item Name: Mid Tube Assembly

Start Date: 6/28/2011 **Start Qty:** 1.00 **Cust Item ID:**

Required Date: 7/27/2011 **Req'd Qty:** 1.00 **Customer:**

Reference:

Run Start **Stop**

Approvals: **Process Plan:** _____ **Date:** _____ **Tooling:** _____ **Date:** _____

QC: _____ **Date:** _____ **SPC (Y/N):** _____ **Date:** _____

Sequence ID/ Work Center ID	Operation Description	Set Up/ Run Hours	Tool ID	Tool #	Plan Code	Accept Qty	Reject Qty	Reject Number	Insp. Stamp
190	White Gloss(Ref:4.3.5.1) per QSI005 4.3-Alum	0.00							
Powdercoat									
Powder Coating	**Memo** START TIME: 3:30 OVEN TEMPERATURE: 320 °F FINISH TIME: 4:00	0.00							
200	QC3- Inspect Part Finish	0.00							
QC	**Memo**	0.00							
Quality Control									

M118439

~~11-9-27~~

1 of 11/09/27

Dart Aerospace Ltd

W/O:		WORK ORDER CHANGES					
DATE	STEP	PROCEDURE CHANGE	By	Date	Qty	Approval Chief Eng / Prod Mgr	Approval QC Inspector

Part No: _____ **PAR #:** _____ **Fault Category:** _____ **NCR:** Yes No **DQA:** _____ **Date:** _____

Resolution: _____ **Disposition:** _____ **QA: N/C Closed:** _____ **Date:** _____

NCR:		WORK ORDER NON-CONFORMANCE (NCR)						
DATE	STEP	Description of NC Section A	Corrective Action Section B			Verification Section C	Approval Chief Eng	Approval QC Inspector
			Initial Chief Eng	Action Description Chief Eng	Sign & Date			

NOTE: Date & initial all entries

H:\fFORMS\Quality Assurance\approved QA\NCRWO RevE

Work Order ID 71330

Tuesday, June 28, 2011 10:15:17 AM

Item ID: D3391-023 **Accept** **Setup Start** **Stop**

Revision ID:

Item Name: Mid Tube Assembly

Start Date: 6/28/2011 **Start Qty:** 1.00 **Cust Item ID:**

Required Date: 7/27/2011 **Req'd Qty:** 1.00 **Customer:**

Reference:

Approvals: **Process Plan:** _____ **Date:** _____ **Tooling:** _____ **Date:** _____ **Run Start** **Stop**

QC: _____ **Date:** _____ **SPC (Y/N):** _____ **Date:** _____

Sequence ID/ Work Center ID	Operation Description	Set Up/ Run Hours	Tool ID	Tool #	Plan Code	Accept Qty	Reject Qty	Reject Number	Insp. Stamp
210		0.00							
Skidtubes	Skidtubes								
Skidtubes	**Memo**	0.00							
	1- insert D3391-021 into D3391-23								
	2- insert T-pins into first and third fwd saddle holes								
	3- ON FIRST SIDE ONLY drill out 2nd and forth fwd saddles holes to 0.500" as per DSI 9364								
	4- remove T-pins and locate DT9415 from first and third crossbolt hole using T-pins and clekos								
	5- ON 2ND SIDE ONLY ream out 2nd and forth saddle hole to 0.499". Remove DT9415								
	6- deburr, re-alodine and blow out chips								
	7- press fit D3591-1 spacers using DT9416 starting from 0.500" side								
220	QC5- Inspect part completeness to step on W/O	0.00							
QC	**Memo**	0.00							
Quality Control									

Dart Aerospace Ltd

W/O:		WORK ORDER CHANGES					
DATE	STEP	PROCEDURE CHANGE	By	Date	Qty	Approval Chief Eng / Prod Mgr	Approval QC Inspector

Part No: _____ **PAR #:** _____ **Fault Category:** _____ **NCR:** Yes No **DQA:** _____ **Date:** _____

Resolution: _____ **Disposition:** _____ **QA: N/C Closed:** _____ **Date:** _____

NCR:		WORK ORDER NON-CONFORMANCE (NCR)						
DATE	STEP	Description of NC Section A	Corrective Action Section B			Verification Section C	Approval Chief Eng	Approval QC Inspector
			Initial Chief Eng	Action Description Chief Eng	Sign & Date			

NOTE: Date & initial all entries

H:\fFORMS\Quality Assurance\approved QA\NCRWO RevE

Work Order ID 71330

Tuesday, June 28, 2011 10:15:17 AM

Item ID: D3391-023 **Accept** **Setup Start**

Revision ID: **Stop**

Item Name: Mid Tube Assembly

Start Date: 6/28/2011 **Start Qty:** 1.00 **Cust Item ID:**

Required Date: 7/27/2011 **Req'd Qty:** 1.00 **Customer:**

Reference:

Approvals: **Process Plan:** _____ **Date:** _____ **Tooling:** _____ **Date:** _____ **Run Start**

QC: _____ **Date:** _____ **SPC (Y/N):** _____ **Date:** _____ **Stop**

Sequence ID/ Work Center ID	Operation Description	Set Up/ Run Hours	Tool ID	Tool #	Plan Code	Accept Qty	Reject Qty	Reject Number	Insp. Stamp
230	HandFinishing	0.00							
HandFinish	Memo	0.00				1	ϕ	MI	11/06/28
Hand Finishing	C Install Inserts as per Dwg								
240	QC5- Inspect part completeness to step on W/O	0.00							
QC	Memo	0.00	S 11/06/28			1			
Quality Control									
250	Identify as per dwg & Stock Location: w/o	0.00	D412-712-043 / B71328						
Packaging	Memo	0.00				1	ϕ	MI	11/06/28
Packaging									

Dart Aerospace Ltd

W/O:		WORK ORDER CHANGES					
DATE	STEP	PROCEDURE CHANGE	By	Date	Qty	Approval Chief Eng / Prod Mgr	Approval QC Inspector

Part No: _____ **PAR #:** _____ **Fault Category:** _____ **NCR:** Yes No **DQA:** _____ **Date:** _____

Resolution: _____ **Disposition:** _____ **QA: N/C Closed:** _____ **Date:** _____

NCR:		WORK ORDER NON-CONFORMANCE (NCR)						
DATE	STEP	Description of NC Section A	Corrective Action Section B			Verification Section C	Approval Chief Eng	Approval QC Inspector
			Initial Chief Eng	Action Description Chief Eng	Sign & Date			

NOTE: Date & initial all entries

H:\fFORMS\Quality Assurance\approved QA\NCRWO RevE

Work Order ID 71330

Tuesday, June 28, 2011 10:15:17 AM

Item ID: D3391-023 **Accept** **Setup Start**

Revision ID: **Stop**

Item Name: Mid Tube Assembly

Start Date: 6/28/2011 **Start Qty:** 1.00 **Cust Item ID:**

Required Date: 7/27/2011 **Req'd Qty:** 1.00 **Customer:**

Reference:

Approvals: **Process Plan:** _____ **Date:** _____ **Tooling:** _____ **Date:** _____ **Run Start**

QC: _____ **Date:** _____ **SPC (Y/N):** _____ **Date:** _____ **Stop**

Sequence ID/ Work Center ID	Operation Description	Set Up/ Run Hours	Tool ID	Tool #	Plan Code	Accept Qty	Reject Qty	Reject Number	Insp. Stamp
260	QC21- Final Inspection - Work Order Release	0.00							11/10/3
QC Quality Control	**Memo**	0.00							

MK
11-09-28

Dart Aerospace Ltd

W/O:		WORK ORDER CHANGES					
DATE	STEP	PROCEDURE CHANGE	By	Date	Qty	Approval Chief Eng / Prod Mgr	Approval QC Inspector

Part No: _____ **PAR #:** _____ **Fault Category:** _____ **NCR:** Yes No **DQA:** _____ **Date:** _____

Resolution: _____ **Disposition:** _____ **QA: N/C Closed:** _____ **Date:** _____

NCR:		WORK ORDER NON-CONFORMANCE (NCR)						
DATE	STEP	Description of NC Section A	Corrective Action Section B			Verification Section C	Approval Chief Eng	Approval QC Inspector
			Initial Chief Eng	Action Description Chief Eng	Sign & Date			

NOTE: Date & initial all entries

H:\fFORMS\Quality Assurance\approved QA\NCRWO RevE

Picklist Print

Tuesday, June 28, 2011 10:15:14 AM

Work Order ID: 71330

Parent Item: D3391-023

Parent Item Name: Mid Tube Assembly

Start Date: 6/28/2011 **Required Date:** 7/27/2011

Start Qty: 1.00 **Required Qty:** 1.00

Comments:
IPP A□05.10.20□New Issue□ KJ/EC□
IPP B□06.02.10□ECN773 dwg rev.D EC□
IPP C 07.03.20 rev F dwg EC
IPP D 07.03.28 re-format EC
IPP E 07.10.31 ecn 1053P EC
IPP Rev:F ECN 1056 07-11-13 DD verified by: EC
IPP Rev:G 08-09-08 new process (ecn 08-510) DD verified by:EC
IPP Rev:H 08-09-10 revH as per dwg DD verified by:EC
IPP Rev: I 08-11-13 Removed steps per w/o, QC KJ verified by: ec IPP
Rev:J add in seq 140 expire date &b# sikaflex DD 10.02.17 verified by:EC

Component Item ID/ Item Name	Replacement Item ID	Mfg/ Purch	Bin Item	Primary Location	Last Location	Route Seq ID	Unit of Measure	Qty on Hand	Qty per Kit	Total Qty	Qty Issued	Date Issued	Status
D2500-1-100		Manufactured	No			100	Each	82.0000	1	1			
Skidtube Extrusion													
				Location		**Loc Qty**		**Loc Code**					
				HALL		82							
					37065	7				1			
					50251	75							
D3391-021		Manufactured	No			100	Each	0.0000	1	1			
Fwd Tube Assembly													
D3389-1		Manufactured	No			140	Each	0.0000	1	1			
Web													
D3681-1		Manufactured	No	B72165		160	Each	24.0000	5	5			
Spacer													
				Location		**Loc Qty**		**Loc Code**					
				LG		24							
					68958	2							
					69893	22							

11/09/29.

B73132d 09/28

11-9-19

B-71845 ×6

Dart Aerospace Ltd

W/O:		WORK ORDER CHANGES					
DATE	STEP	PROCEDURE CHANGE	By	Date	Qty	Approval Chief Eng / Prod Mgr	Approval QC Inspector

Part No: _____ PAR #: _____ Fault Category: _____ NCR: Yes No DQA: _____ Date: _____

Resolution: _____ Disposition: _____ QA: N/C Closed: _____ Date: _____

NCR:		WORK ORDER NON-CONFORMANCE (NCR)						
DATE	STEP	Description of NC Section A	Corrective Action Section B			Verification Section C	Approval Chief Eng	Approval QC Inspector
			Initial Chief Eng	Action Description Chief Eng	Sign & Date			

NOTE: Date & initial all entries

H:\fFORMS\Quality Assurance\approved QA\NCRWO RevE

Picklist Print

Tuesday, June 28, 2011 10:15:14 AM

Work Order ID: 71330

Parent Item: D3391-023

Parent Item Name: Mid Tube Assembly

Start Date: 6/28/2011 **Required Date:** 7/27/2011

Start Qty: 1.00 **Required Qty:** 1.00

D3591-1	Manufactured	No	210	Each	27.0000	2	2	
Bushing								4/09/27

Location	Loc Qty	Loc Code	
ST068	27		
57350	2		
66147	25		X2

ALS4-1032-130	Purchased	No	230	Each	1,122.000	20	20	
Insert ALS-7-1032-130								4/09/27

Location	Loc Qty	Loc Code	
ST281	8		
117331	8		
ST282	1114		
117717	1114		X20

Dart Aerospace Ltd

W/O:		WORK ORDER CHANGES					
DATE	STEP	PROCEDURE CHANGE	By	Date	Qty	Approval Chief Eng / Prod Mgr	Approval QC Inspector

Part No: _____ **PAR #:** _____ **Fault Category:** _____ **NCR:** Yes No **DQA:** _____ **Date:** _____

Resolution: _____ **Disposition:** _____ **QA: N/C Closed:** _____ **Date:** _____

NCR:		WORK ORDER NON-CONFORMANCE (NCR)						
DATE	STEP	Description of NC Section A	Corrective Action Section B			Verification Section C	Approval Chief Eng	Approval QC Inspector
			Initial Chief Eng	Action Description Chief Eng	Sign & Date			

NOTE: Date & initial all entries

H:\fFORMS\Quality Assurance\approved QA\NCRWO RevE

#71330

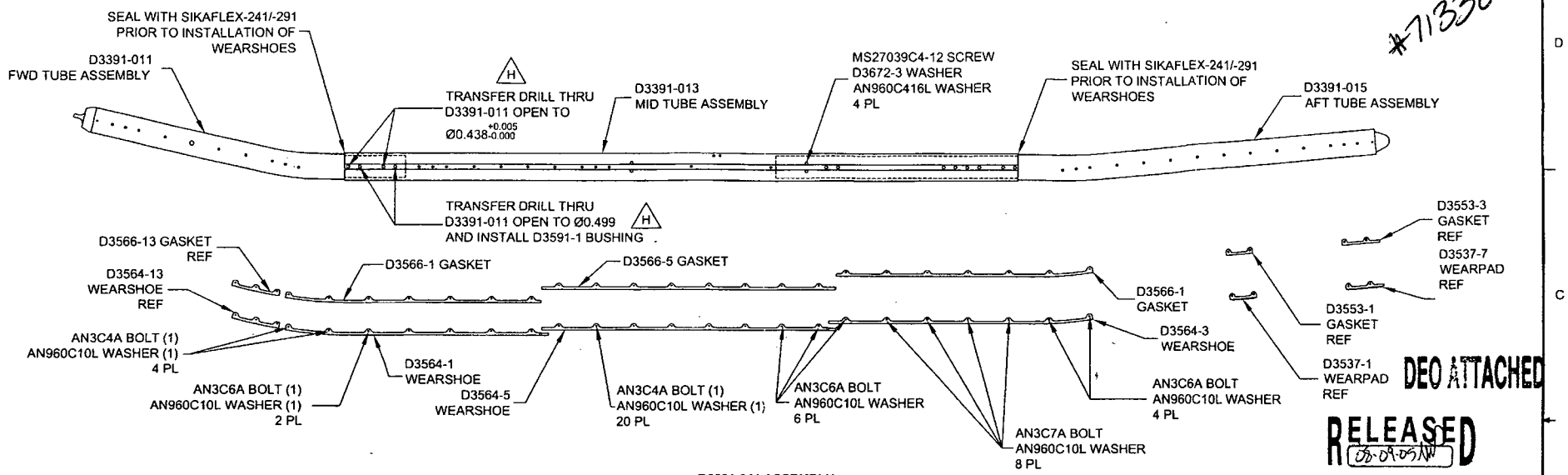

DEO ATTACHED

RELEASED 08.09.05 NW

D3391-041 ASSEMBLY

REV.	DESCRIPTION	BY	DATE
H	DRAWING UPDATED TO CURRENT STANDARDS. SHT 1 PL ADDED D3591-1 BUSHING. ZN C6 Ø0.438 DIM WAS 4 PL. ADDED Ø0.499 DIM AND D3591-1 BUSHING. SHT 2 PL ADDED D3591-1 BUSHING. ZN C6 Ø0.438 DIM WAS 4 PL. ADDED Ø0.499 DIM AND D3591-1 BUSHING. (FOR FURTHER INFO SEE DSI 9364 & NCR 08-074)	AJS	08.08.20
G	REPLACE NAS INSERTS W/ AELS INSERTS SWITCH TO D3670-XXXX SPACERS FOR INSTALLING FLOAT BAGS, DWG REORGANIZED FOR CLARITY	DC	07.07.31
F	ADD SS WEARSHOE, GASKET REMOVE FWD SADDLE HOLE -011/-021	PH	07.01.18
E	CHANGE TOLERANCE, EASE MANUFACTURE	PH	06.04.25
D	UPDATE TOLERANCE, CHANGE HOLE SIZE	PH	06.01.23
C	LENGTHEN AFT EXTENSION	PH	05.09.27
B	DRAWING UPDATES	PH	05.06.10
A	NEW ISSUE	PH	05.02.07

D3391-041 FLOAT SKIDTUBE ASSEMBLY PARTS LIST

QTY -041	PART NUMBER	DESCRIPTION
X	D3391-041	FLOAT SKIDTUBE ASSEMBLY
1	D3391-011	FWD TUBE ASSEMBLY
1	D3391-013	MID TUBE ASSEMBLY
1	D3391-015	AFT TUBE ASSEMBLY
1	D3564-1	WEARSHOE
1	D3564-3	WEARSHOE
1	D3564-5	WEARSHOE
2	D3566-1	GASKET
1	D3566-5	GASKET
2	D3591-1	BUSHING
4	D3672-3	WASHER
24	AN3C4A	BOLT
12	AN3C6A	BOLT
8	AN3C7A	BOLT
44	AN960C10L	WASHER
4	MS27039C4-12	SCREW
4	AN960C416L	WASHER

H

GENERAL NOTES

1) FINISH: CHEMICAL CONVERSION COAT PER DART QSI 005 4.1
POWDER COAT WHITE (4.3.5.1) PER DART QSI 005 4.3
2) SPRAY INSIDE OF TUBE WITH A COAT OF LPS LABORATORIES "LPS-3" AFTER FINISH AND AFTER INSTALLATION OF INSERTS. COAT ALL EXPOSED FASTENERS WITH LPS LABORATORIES "LPS PROCYON" AFTER FINAL ASSEMBLY, CLEAN EXCESS OFF POWDER COATING WITH MEK DEGREASER.
3) TOLERANCES: PER DART QSI 018 UNLESS OTHERWISE NOTED
4) UNITS: INCHES UNLESS OTHERWISE NOTED
5) USE DART DRILL TEMPLATE DT8217 TO LOCATE AND DRILL Ø0.297 SIZE HOLES FOR WEARSHOE INSERTS. C'BORE AS NOTED AND INSTALL INSERTS EXCEPT WHERE INDICATED.

DESIGN	PH	**DART AEROSPACE USA, INC** PORT HADLOCK, WA
DRAWN	AJS	
CHECKED		DRAWING NO. D3391 — REV. H — SHEET 1 OF 8
MFG. APPR.		
APPROVED		TITLE: 412 FLOAT SKIDTUBE — SCALE: NTS
DE APPR.		
DATE	08.08.20	

Dart Aerospace Ltd

W/O:		WORK ORDER CHANGES					
DATE	STEP	PROCEDURE CHANGE	By	Date	Qty	Approval Chief Eng / Prod Mgr	Approval QC Inspector

Part No: _____ **PAR #:** _____ **Fault Category:** _____ **NCR:** Yes No **DQA:** _____ **Date:** _____

Resolution: _____ **Disposition:** _____ **QA: N/C Closed:** _____ **Date:** _____

NCR:		WORK ORDER NON-CONFORMANCE (NCR)						
DATE	STEP	Description of NC Section A	Corrective Action Section B			Verification Section C	Approval Chief Eng	Approval QC Inspector
			Initial Chief Eng	Action Description Chief Eng	Sign & Date			

NOTE: Date & initial all entries

#71330

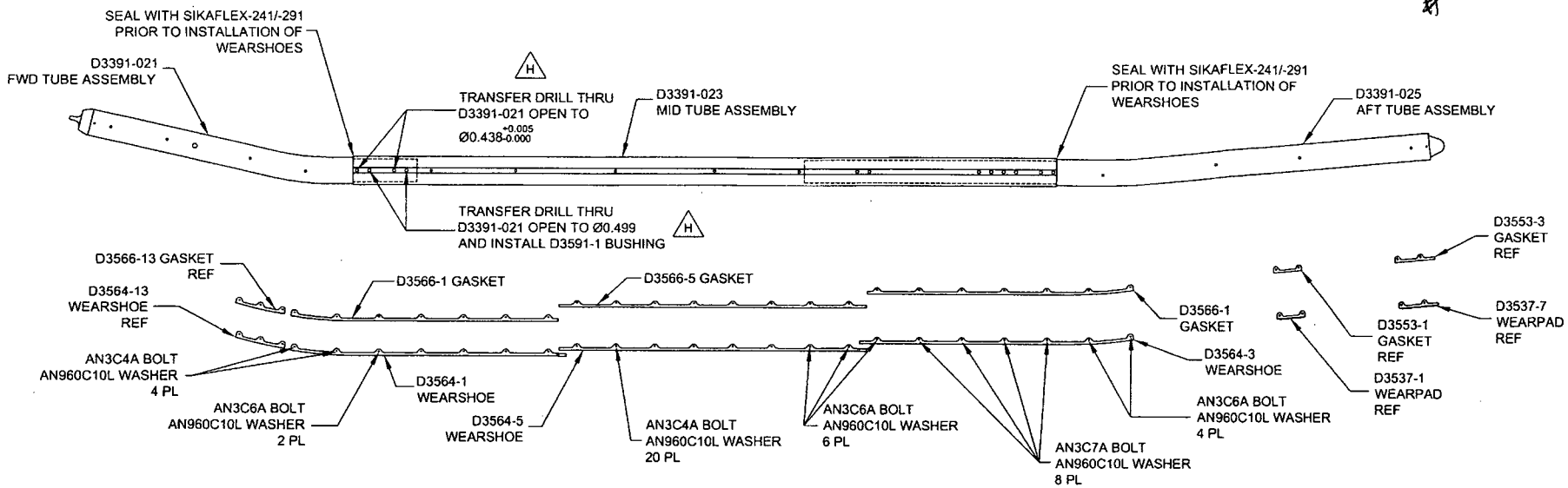

D3391-043 ASSEMBLY

D3391-043 FLOAT SKIDTUBE ASSEMBLY PARTS LIST

QTY -043	PART NUMBER	DESCRIPTION
X	D3391-043	FLOAT SKIDTUBE ASSEMBLY
1	D3391-021	FWD TUBE ASSEMBLY
1	D3391-023	MID TUBE ASSEMBLY
1	D3391-025	AFT TUBE ASSEMBLY
1	D3564-1	WEARSHOE
1	D3564-3	WEARSHOE
1	D3564-5	WEARSHOE
2	D3566-1	GASKET
1	D3566-5	GASKET
H 2	D3591-1	BUSHING
24	AN3C4A	BOLT
12	AN3C6A	BOLT
8	AN3C7A	BOLT
44	AN960C10L	WASHER

GENERAL NOTES

1) FINISH: CHEMICAL CONVERSION COAT PER DART QSI 005 4.1
POWDER COAT WHITE (4.3.5.1) PER DART QSI 005 4.3
2) SPRAY INSIDE OF TUBE WITH A COAT OF LPS LABORATORIES "LPS-3" AFTER FINISH AND AFTER INSTALLATION OF INSERTS. COAT ALL EXPOSED FASTENERS WITH LPS LABORATORIES "LPS PROCYON" AFTER FINAL ASSEMBLY, CLEAN EXCESS OFF POWDER COATING WITH MEK DEGREASER.
3) TOLERANCES: PER DART QSI 018 UNLESS OTHERWISE NOTED
4) UNITS: INCHES UNLESS OTHERWISE NOTED
5) USE DART DRILL TEMPLATE DT8217 TO LOCATE AND DRILL Ø0.297 SIZE HOLES FOR WEARSHOE INSERTS. C'BORE AS NOTED AND INSTALL INSERTS EXCEPT WHERE INDICATED.

DEO ATTACHED

RELEASED 08.09.05

DESIGN	PH	DART AEROSPACE USA, INC PORT HADLOCK, WA
DRAWN	AJS	
CHECKED		DRAWING NO. REV. H
MFG. APPR.		D3391 SHEET 2 OF 8
APPROVED		TITLE SCALE
DE APPR.		412 FLOAT SKIDTUBE NTS
DATE	08.08.20	

Dart Aerospace Ltd

W/O:		WORK ORDER CHANGES					
DATE	STEP	PROCEDURE CHANGE	By	Date	Qty	Approval Chief Eng / Prod Mgr	Approval QC Inspector

Part No: _____ **PAR #:** _____ **Fault Category:** _____ **NCR:** Yes No **DQA:** _____ **Date:** _____

Resolution: _____ **Disposition:** _____ **QA: N/C Closed:** _____ **Date:** _____

NCR:		WORK ORDER NON-CONFORMANCE (NCR)						
DATE	STEP	Description of NC Section A	Corrective Action Section B			Verification Section C	Approval Chief Eng	Approval QC Inspector
			Initial Chief Eng	Action Description Chief Eng	Sign & Date			

NOTE: Date & initial all entries

H:\fFORMS\Quality Assurance\approved QA\NCRWO RevE

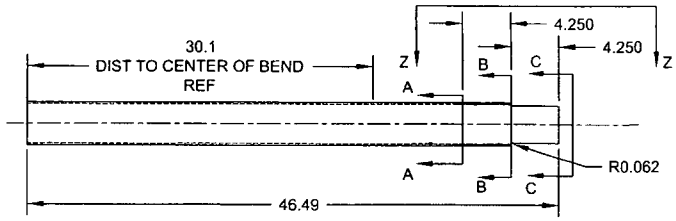

D3391-1 CUTTING DETAIL
(MAKE FROM D6013-047 SKIDTUBE MATERIAL)

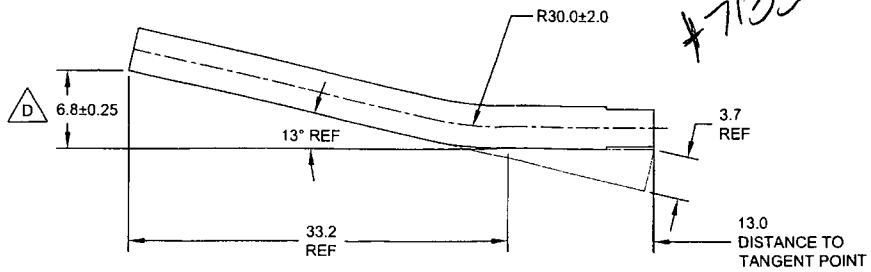

#71330

D3391-011/-021 BENDING DETAIL
(MAKE FROM D3391-1)

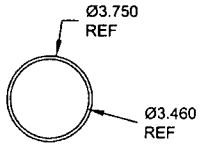

SECTION A-A
SCALE 2X

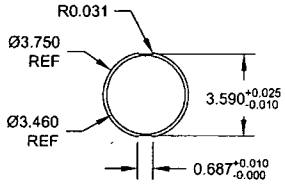

SECTION B-B
SCALE 2X

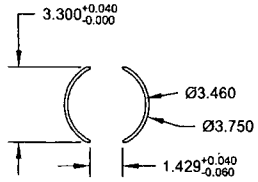

SECTION C-C
SCALE 2X

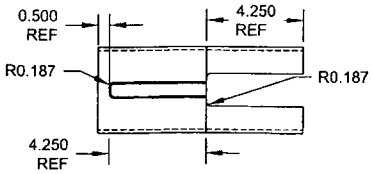

VIEW Z-Z
SCALE 2X

DEO ATTACHED

RELEASED
08.09.05 NW

DESIGN	PH	**DART AEROSPACE USA, INC** PORT HADLOCK, WA
DRAWN	AJS	
CHECKED		DRAWING NO. D3391 — REV. H — SHEET 3 OF 8
MFG. APPR.		
APPROVED		TITLE: 412 FLOAT SKIDTUBE — SCALE: NTS
DE APPR.		
DATE	08.08.20	

Dart Aerospace Ltd

W/O:		WORK ORDER CHANGES					
DATE	STEP	PROCEDURE CHANGE	By	Date	Qty	Approval Chief Eng / Prod Mgr	Approval QC Inspector

Part No: _____ **PAR #:** _____ **Fault Category:** _____ **NCR:** Yes No **DQA:** _____ **Date:** _____

Resolution: _____ **Disposition:** _____ **QA: N/C Closed:** _____ **Date:** _____

NCR:		WORK ORDER NON-CONFORMANCE (NCR)						
DATE	STEP	Description of NC Section A	Corrective Action Section B			Verification Section C	Approval Chief Eng	Approval QC Inspector
			Initial Chief Eng	Action Description Chief Eng	Sign & Date			

NOTE: Date & initial all entries

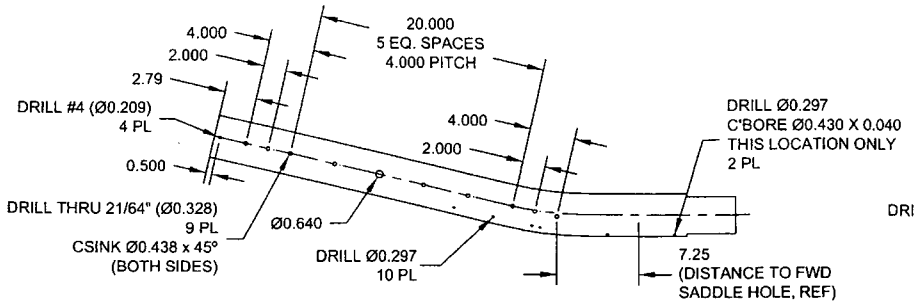

D3391-011 DRILLING DETAIL

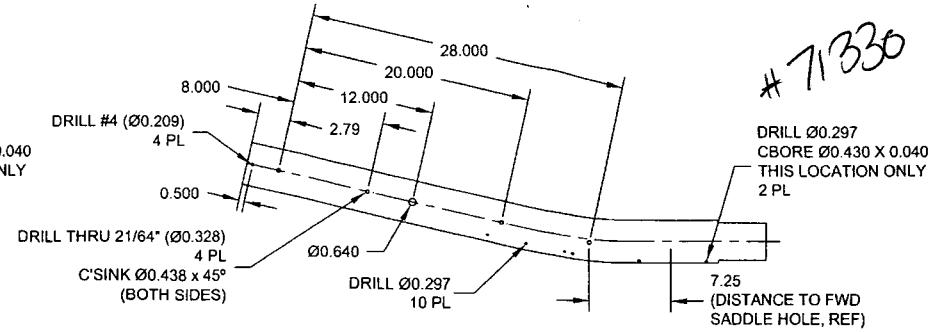

#71330

D3391-021 DRILLING DETAIL

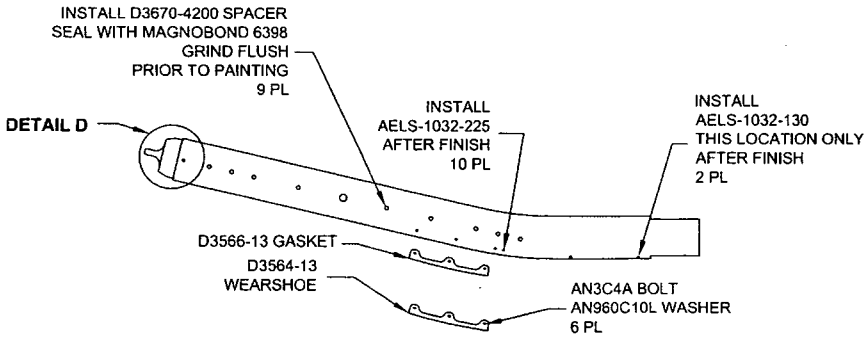

D3391-011 ASSEMBLY DETAIL

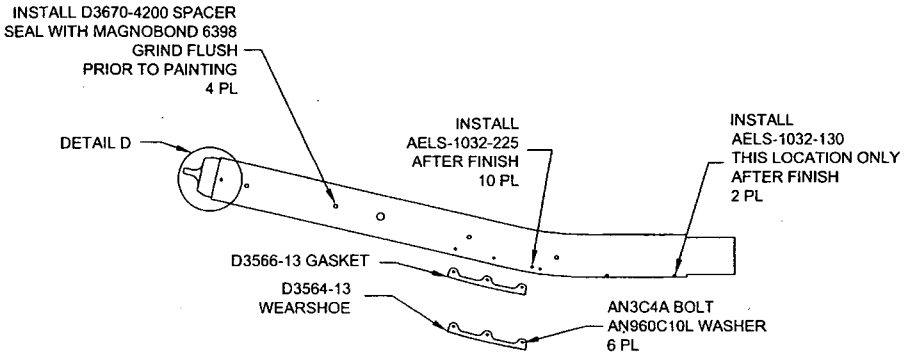

D3391-021 ASSEMBLY DETAIL

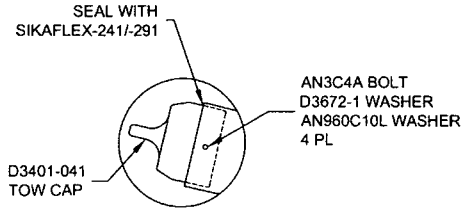

DETAIL D
SCALE 2X

D3391-011/-021 FWD TUBE ASSEMBLY PARTS LIST

QTY - 011	QTY - 021	PART NUMBER	DESCRIPTION
X		D3391-011	FWD TUBE ASSEMBLY
	X	D3391-021	FWD TUBE ASSEMBLY
1	1	D6013-047	FWD TUBE
1	1	D3401-041	TOW CAP
1	1	D3564-13	WEARSHOE
1	1	D3566-13	GASKET
9	4	D3670-4200	SPACER
4	4	D3672-1	WASHER
10	10	AN3C4A	BOLT
10	10	AN960C10L	WASHER
2	2	AELS-1032-130	INSERT
10	10	AELS-1032-225	INSERT

DEO ATTACHED

RELEASED 08-09-05 MW

DESIGN	PH	DART AEROSPACE USA, INC PORT HADLOCK, WA
DRAWN	AJS	
CHECKED		DRAWING NO. REV. H
MFG. APPR.		D3391 SHEET 4 OF 8
APPROVED		TITLE SCALE
DE APPR.		412 FLOAT SKIDTUBE NTS
DATE	08.08.20	

Dart Aerospace Ltd

W/O:		WORK ORDER CHANGES					
DATE	STEP	PROCEDURE CHANGE	By	Date	Qty	Approval Chief Eng / Prod Mgr	Approval QC Inspector

Part No: _____ **PAR #:** _____ **Fault Category:** _____ **NCR:** Yes No **DQA:** _____ **Date:** _____

Resolution: _____ **Disposition:** _____ **QA: N/C Closed:** _____ **Date:** _____

NCR:		WORK ORDER NON-CONFORMANCE (NCR)						
DATE	STEP	Description of NC Section A	Corrective Action Section B			Verification Section C	Approval Chief Eng	Approval QC Inspector
			Initial Chief Eng	Action Description Chief Eng	Sign & Date			

NOTE: Date & initial all entries

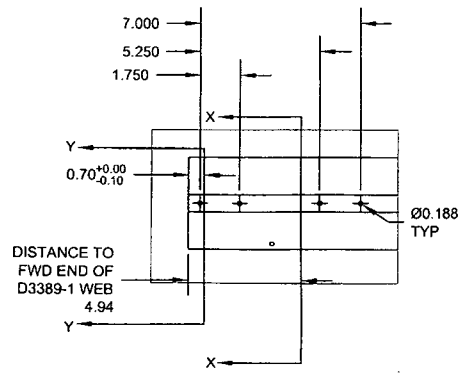

DETAIL J
SCALE 4X

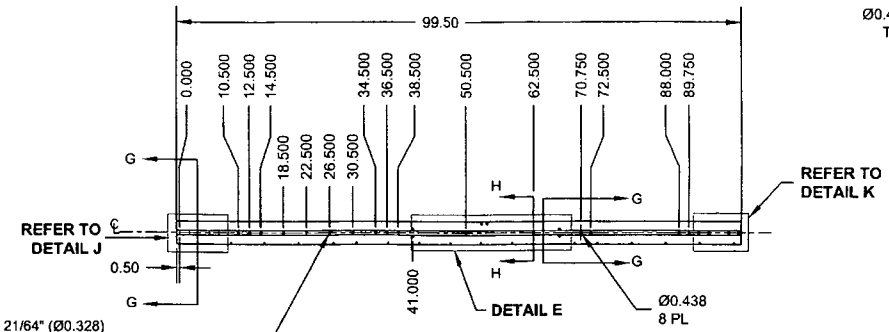

D3391-013 ASSEMBLY DETAIL

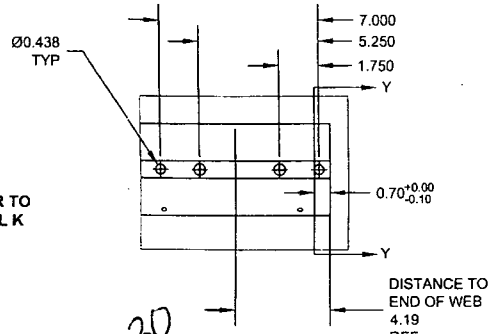

DETAIL K
SCALE 4X

#71330

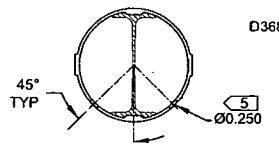

SECTION G-G
SCALE 5X

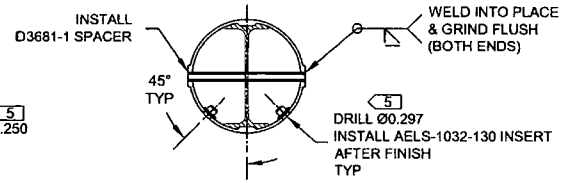

SECTION H-H 12 PL
SCALE 5X

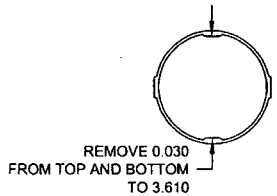

SECTION X-X
SCALE 5X

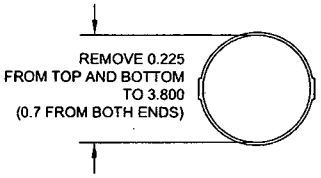

SECTION Y-Y
SCALE 5X

D3391-013 MID TUBE ASSEMBLY PARTS LIST

QTY -013	PART NUMBER	DESCRIPTION
X	D3391-013	MID TUBE ASSEMBLY
1	D2500-1-100	EXTRUSION
1	D3389-1	WEB
4	D3672-1	WASHER
4	D3672-3	WASHER
12	D3681-1	SPACER
24	AELS-1032-130	INSERT
4	ALS4-428-165	INSERT
4	AN960C10L	WASHER
4	AN960C416L	WASHER
4	MS27039C1-09	SCREW
4	MS27039C4-08	SCREW

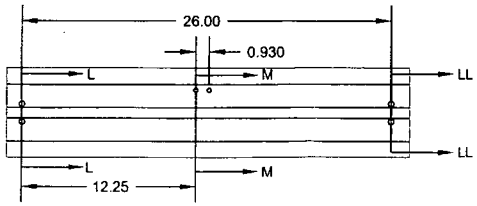

DETAIL E
SCALE NONE

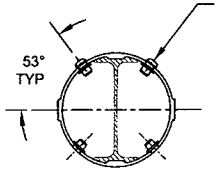

DRILL Ø0.297
INSTALL AELS-1032-130 INSERT
MS27039C1-09 SCREW
D3672-1 WASHER
AN960C10L WASHER
AFTER FINISH
4 PL

SECTION M-M
SCALE 5X

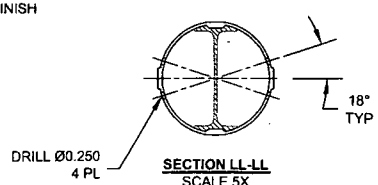

SECTION LL-LL
SCALE 5X

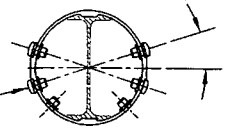

DRILL Ø0.391
INSTALL ALS4-428-165 INSERT
MS27039C4-08 SCREW
D3672-3 WASHER
AN960C416L WASHER
AFTER FINISH
4 PL

SECTION L-L
SCALE 5X

D3391-013 MID TUBE ASSEMBLY

1) MATERIAL: MAKE FROM D2500-1-100 EXTRUSION
2) INSTALL D3389-1 WEB TO OUTER TUBE USING SIKAFLEX-241/-291 PER QSI 015
3) WELDING: PER DART QSI 004

DEO ATTACHED

RELEASED 08-04-20

DESIGN	PH	**DART AEROSPACE USA, INC** PORT HADLOCK, WA
DRAWN	AJS	
CHECKED		DRAWING NO. REV. H
MFG. APPR.		D3391 SHEET 5 OF 8
APPROVED		TITLE SCALE
DE APPR.		412 FLOAT SKIDTUBE NTS
DATE	08.08.20	

Dart Aerospace Ltd

W/O:		WORK ORDER CHANGES					
DATE	STEP	PROCEDURE CHANGE	By	Date	Qty	Approval Chief Eng / Prod Mgr	Approval QC Inspector

Part No: _____ **PAR #:** _____ **Fault Category:** _____ **NCR:** Yes No **DQA:** _____ **Date:** _____

Resolution: _____ **Disposition:** _____ **QA: N/C Closed:** _____ **Date:** _____

NCR:		WORK ORDER NON-CONFORMANCE (NCR)						
DATE	STEP	Description of NC Section A	Corrective Action Section B			Verification Section C	Approval Chief Eng	Approval QC Inspector
			Initial Chief Eng	Action Description Chief Eng	Sign & Date			

NOTE: Date & initial all entries

H:\fFORMS\Quality Assurance\approved QA\NCRWO RevE

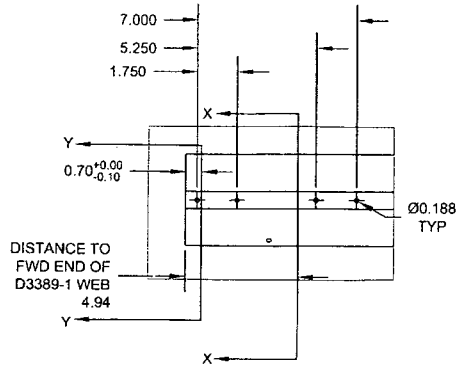

DETAIL J
SCALE 4X

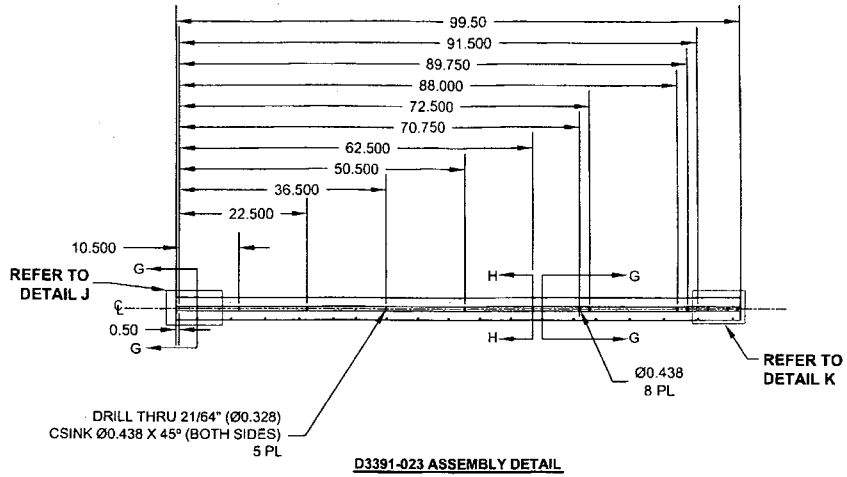

D3391-023 ASSEMBLY DETAIL

#7330

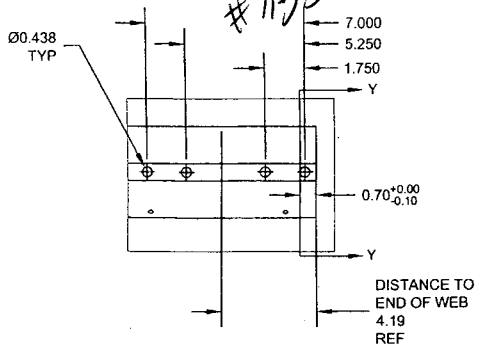

DETAIL K
SCALE 4X

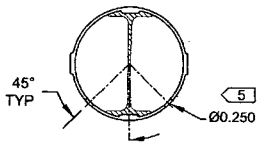

SECTION G-G
SCALE 5X

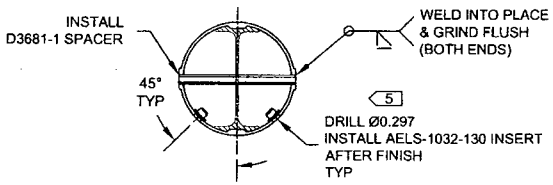

SECTION H-H 5 PL
SCALE 5X

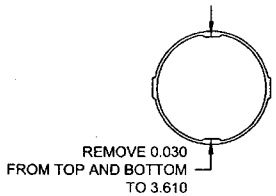

SECTION X-X
SCALE 5X

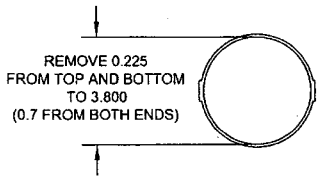

SECTION Y-Y
SCALE 5X

DEO ATTACHED

RELEASED 08-09-05 NV

D3391-023 MID TUBE ASSEMBLY PARTS LIST

QTY - 023	PART NUMBER	DESCRIPTION
X	D3391-023	MID TUBE ASSEMBLY
1	D2500-1-100	EXTRUSION
1	D3389-1	WEB
5	D3681-1	SPACER
20	AELS-1032-130	INSERT

D3391-023 MID TUBE ASSEMBLY

1) MATERIAL: MAKE FROM D2500-1-100 EXTRUSION
2) INSTALL D3389-1 WEB TO OUTER TUBE USING SIKAFLEX-241/-291 PER QSI 015
3) WELDING: PER DART QSI 004

DESIGN	PH	**DART AEROSPACE USA, INC** PORT HADLOCK, WA
DRAWN	AJS	
CHECKED		DRAWING NO. REV. H
MFG. APPR.		D3391 SHEET 6 OF 8
APPROVED		TITLE SCALE
DE APPR.		412 FLOAT SKIDTUBE NTS
DATE	08.08.20	

Dart Aerospace Ltd

W/O:		WORK ORDER CHANGES					
DATE	STEP	PROCEDURE CHANGE	By	Date	Qty	Approval Chief Eng / Prod Mgr	Approval QC Inspector

Part No: _____ **PAR #:** _____ **Fault Category:** _____ **NCR:** Yes No **DQA:** _____ **Date:** _____

Resolution: _____ **Disposition:** _____ **QA: N/C Closed:** _____ **Date:** _____

NCR:		WORK ORDER NON-CONFORMANCE (NCR)						
DATE	STEP	Description of NC Section A	Corrective Action Section B			Verification Section C	Approval Chief Eng	Approval QC Inspector
			Initial Chief Eng	Action Description Chief Eng	Sign & Date			

NOTE: Date & initial all entries

H:\fFORMS\Quality Assurance\approved QA\NCRWO RevE

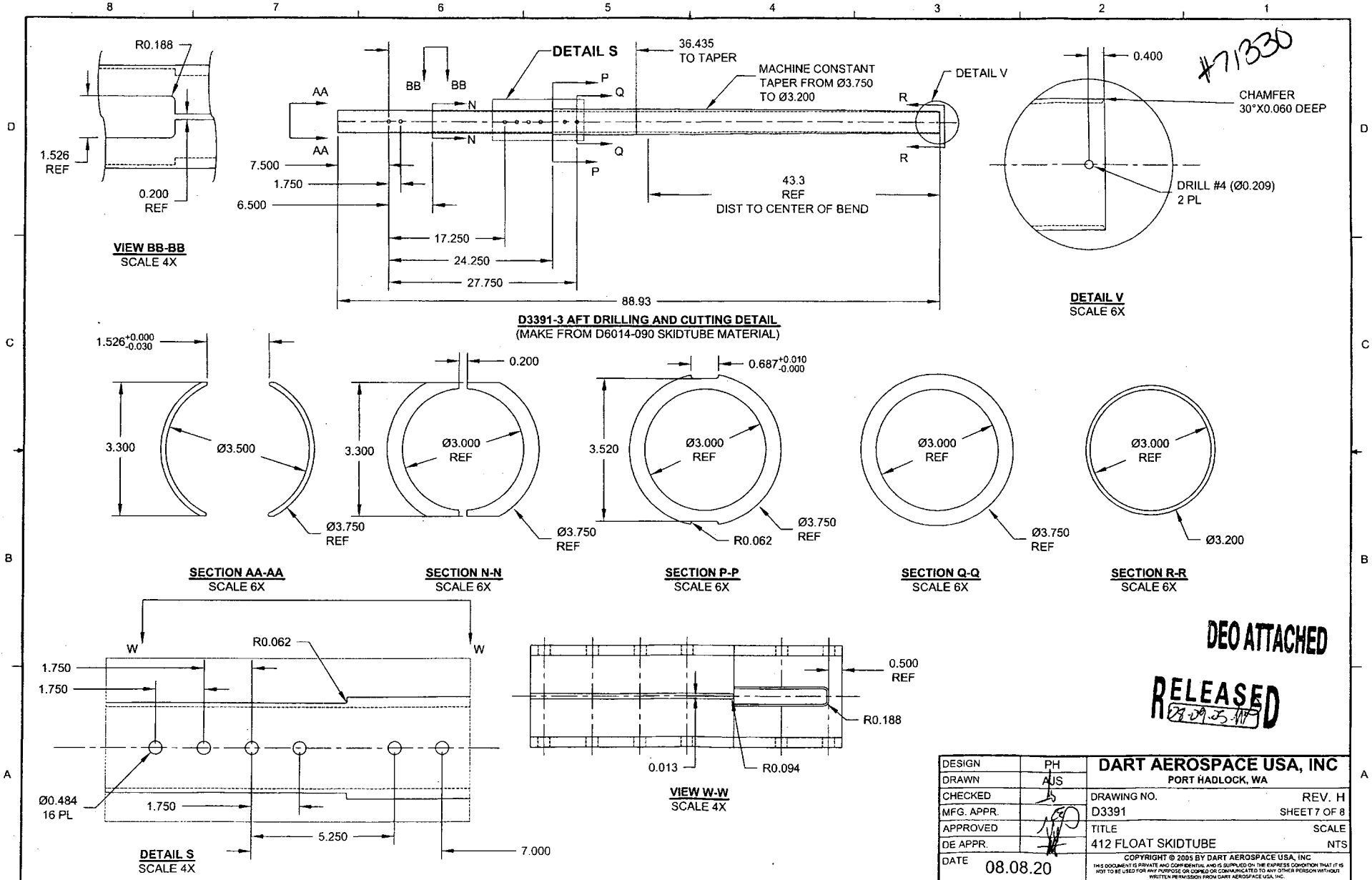
R0.188
1.526 REF
0.200 REF
VIEW BB-BB
SCALE 4X
AA
BB
N
P
Q
R
DETAIL S
36.435 TO TAPER
MACHINE CONSTANT TAPER FROM Ø3.750 TO Ø3.200
DETAIL V
7.500
1.750
6.500
17.250
24.250
27.750
88.93
43.3 REF DIST TO CENTER OF BEND
D3391-3 AFT DRILLING AND CUTTING DETAIL
(MAKE FROM D6014-090 SKIDTUBE MATERIAL)
0.400
CHAMFER 30°X0.060 DEEP
DRILL #4 (Ø0.209) 2 PL
DETAIL V
SCALE 6X
#71330
1.526 +0.000 -0.030
3.300
Ø3.500
Ø3.750 REF
SECTION AA-AA
SCALE 6X
0.200
Ø3.000 REF
SECTION N-N
SCALE 6X
0.687 +0.010 -0.000
3.520
R0.062
SECTION P-P
SCALE 6X
SECTION Q-Q
SCALE 6X
Ø3.200
SECTION R-R
SCALE 6X
W
R0.062
Ø0.484 16 PL
5.250
7.000
DETAIL S
SCALE 4X
0.500 REF
R0.188
0.013
R0.094
VIEW W-W
SCALE 4X
DEO ATTACHED
RELEASED
DESIGN PH
DRAWN AJS
CHECKED
MFG. APPR.
APPROVED
DE APPR.
DATE 08.08.20
DART AEROSPACE USA, INC
PORT HADLOCK, WA
DRAWING NO. D3391
REV. H
SHEET 7 OF 8
TITLE 412 FLOAT SKIDTUBE
SCALE NTS
COPYRIGHT © 2005 BY DART AEROSPACE USA, INC
THIS DOCUMENT IS PRIVATE AND CONFIDENTIAL AND IS SUPPLIED ON THE EXPRESS CONDITION THAT IT IS NOT TO BE USED FOR ANY PURPOSE OR COPIED OR COMMUNICATED TO ANY OTHER PERSON WITHOUT WRITTEN PERMISSION FROM DART AEROSPACE USA, INC.

Dart Aerospace Ltd

W/O:		WORK ORDER CHANGES					
DATE	STEP	PROCEDURE CHANGE	By	Date	Qty	Approval Chief Eng / Prod Mgr	Approval QC Inspector

Part No: _____ **PAR #:** _____ **Fault Category:** _____ **NCR:** Yes No **DQA:** _____ **Date:** _____

Resolution: _____ **Disposition:** _____ **QA: N/C Closed:** _____ **Date:** _____

NCR:		WORK ORDER NON-CONFORMANCE (NCR)						
DATE	STEP	Description of NC Section A	Corrective Action Section B			Verification Section C	Approval Chief Eng	Approval QC Inspector
			Initial Chief Eng	Action Description Chief Eng	Sign & Date			

NOTE: Date & initial all entries

H:\fFORMS\Quality Assurance\approved QA\NCRWO RevE

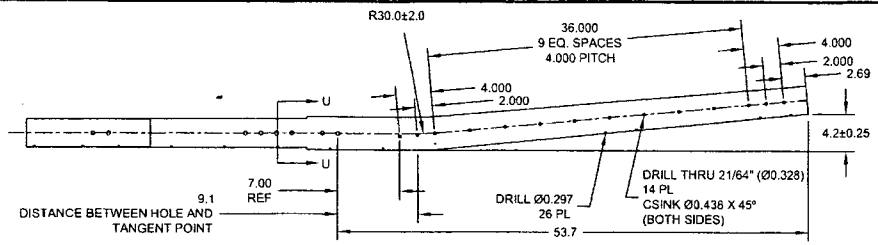

D3391-015 BENDING AND DRILLING DETAIL
(SEE CBORE DETAIL BELOW)

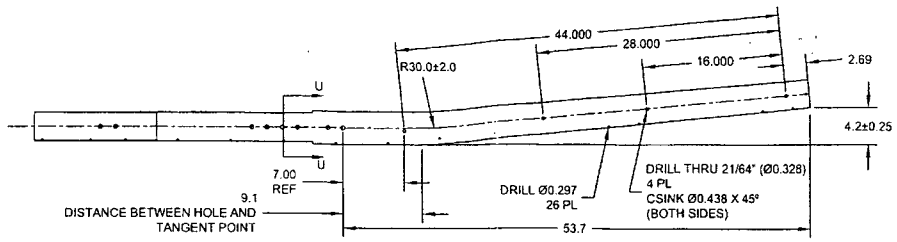

D3391-025 BENDING AND DRILLING DETAIL
(SEE CBORE DETAIL BELOW)

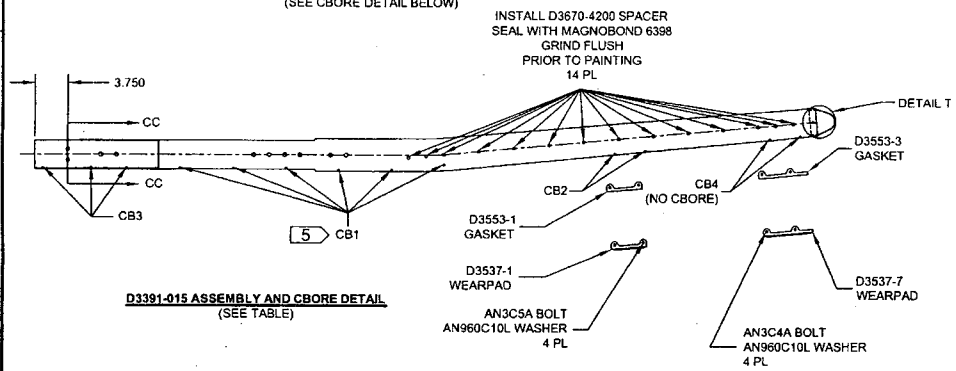

D3391-015 ASSEMBLY AND CBORE DETAIL
(SEE TABLE)

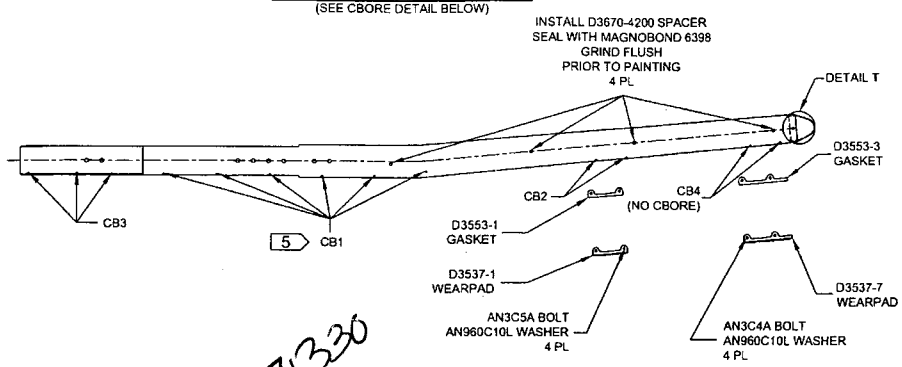

D3391-025 ASSEMBLY AND CBORE DETAIL
(SEE TABLE)

#71330

D3391-015/-025 AFT TUBE ASSEMBLY PARTS LIST

QTY - 015	QTY - 025	PART NUMBER	DESCRIPTION
X		D3391-015	AFT TUBE ASSEMBLY
	X	D3391-025	AFT TUBE ASSEMBLY
1	1	D6014-090	AFT TUBE
1	1	D2646	AFT CAP
1	1	D3537-1	WEARPAD
1	1	D3537-7	WEARPAD
1	1	D3553-1	GASKET
1	1	D3553-3	GASKET
14	4	D3670-4200	SPACER
2	2	D3672-1	WASHER
14	14	AELS-1032-130	INSERT
12	12	AELS-1032-225	INSERT
4		ALS4-428-165	INSERT
6	6	AN3C4A	BOLT
4	4	AN3C5A	BOLT
10	10	AN960C10L	WASHER

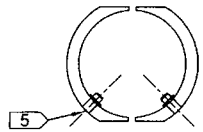

SECTION U-U
SCALE 3X

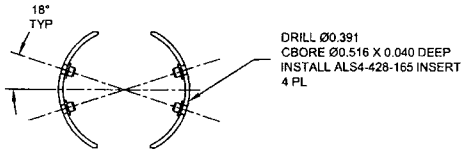

SECTION CC-CC
SCALE 3X

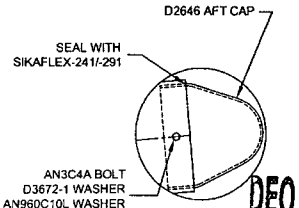

DETAIL T
SCALE 4X

DEO ATTACHED

RELEASED 08.09.05

C'BORE HOLES MARKED CB1-CB4 AS FOLLOWS AND
INSTALL AELS-1032-XXX AFTER FINISH AS NOTED

HOLES MARKED	QTY D3391-015	QTY D3391-025	CBORE	P/N
CB1	12	12	Ø0.430 X 0.170	AELS-1032-225
CB2	4	4	Ø0.430 X 0.170	AELS-1032-130
CB3	6	6	Ø0.430 X 0.040	AELS-1032-130
CB4	4	4	NONE	AELS-1032-130

DESIGN	PH	**DART AEROSPACE USA, INC** PORT HADLOCK, WA
DRAWN	AJS	
CHECKED		DRAWING NO. D3391 — REV. H — SHEET 8 OF 8
MFG. APPR.		
APPROVED		TITLE: 412 FLOAT SKIDTUBE — SCALE: NTS
DE APPR.		
DATE	08.08.20	

Dart Aerospace Ltd

W/O:		WORK ORDER CHANGES					
DATE	STEP	PROCEDURE CHANGE	By	Date	Qty	Approval Chief Eng / Prod Mgr	Approval QC Inspector

Part No: _____ **PAR #:** _____ **Fault Category:** _____ **NCR:** Yes No **DQA:** _____ **Date:** _____

Resolution: _____ **Disposition:** _____ **QA: N/C Closed:** _____ **Date:** _____

NCR:		WORK ORDER NON-CONFORMANCE (NCR)						
DATE	STEP	Description of NC Section A	Corrective Action Section B			Verification Section C	Approval Chief Eng	Approval QC Inspector
			Initial Chief Eng	Action Description Chief Eng	Sign & Date			

NOTE: Date & initial all entries

H:\fFORMS\Quality Assurance\approved QA\NCRWO RevE

DRAWING NO.	TITLE		DART AEROSPACE USA, INC	D.E.O. NO.	SHEET NO.	SCALE
D3391	412 FLOAT SKIDTUBE	REV. H	ENGINEERING ORDER	D3391-H-1	SHEET 1 OF 1	NTS
DRAWN	CHECKED		MFG. APPR.	APPROVED	DE APPR.	
DATE 09.09.23	DATE 09.09.24		DATE 09/09/25	DATE 09/09/30	DATE 09/09/30	

PURPOSE:
LPS-3 IS NO LONGER USED DURING ASSEMBLY OF D3391-041/-043 SKIDTUBES.

CHANGE:
AMEND NOTE 2 OF D3391-041/-043 SKIDTUBE ASSEMBLIES (ZN A6-1, A6-2) AS FOLLOWS:

2) ~~SPRAY INSIDE OF TUBE WITH A COAT OF LPS LABORATORIES "LPS-3" AFTER FINISH AND AFTER INSTALLATION OF INSERTS.~~ COAT ALL EXPOSED FASTENERS WITH LPS LABORATORIES "LPS PROCYON" AFTER FINAL ASSEMBLY, CLEAN EXCESS OFF POWDER COATING WITH MEK DEGREASER.

RELEASED
2010 -02- 02

#71330

Dart Aerospace Ltd

W/O:		WORK ORDER CHANGES					
DATE	STEP	PROCEDURE CHANGE	By	Date	Qty	Approval Chief Eng / Prod Mgr	Approval QC Inspector

Part No: _____ **PAR #:** _____ **Fault Category:** _____ **NCR:** Yes No **DQA:** _____ **Date:** _____

Resolution: _____ **Disposition:** _____ **QA: N/C Closed:** _____ **Date:** _____

NCR:		WORK ORDER NON-CONFORMANCE (NCR)						
DATE	STEP	Description of NC Section A	Corrective Action Section B			Verification Section C	Approval Chief Eng	Approval QC Inspector
			Initial Chief Eng	Action Description Chief Eng	Sign & Date			

NOTE: Date & initial all entries

NO. 264

AWS D17.1.2001
QUALIFICATION TEST RECORD

Name: Barclay Elliott
Job number: 73035
Part number: 3391-023
Description: MIS Tube
Welding Process: Tig[X] Mig[ ]
Base materiel: Aluminum
Current: AC[X] DC[ ]

TEST REQUIREMENTS AND RESULTS

Visual:	pass[✓]	fail[ ]
Penetration:	pass[✓]	fail[ ]

UNACCEPTABLE

Cracks:	pass[✓]	fail[ ]
Undercut:	pass[✓]	fail[ ]
Pin holes:	pass[✓]	fail[ ]
Overlap (cold lap)	pass[✓]	fail[ ]
Porosity (surface):	pass[✓]	fail[ ]
Coloration:	pass[✓]	fail[ ]

Qualifier [signature] **Date of Test Coupon** 11·08·31

Welder [signature] **Date of Test Coupon** 11·08·31

The above named individual is qualified in accordance with AWS D17.1.2001 to weld

Dart Aerospace Ltd

W/O:		WORK ORDER CHANGES					
DATE	STEP	PROCEDURE CHANGE	By	Date	Qty	Approval Chief Eng / Prod Mgr	Approval QC Inspector

Part No: _____ **PAR #:** _____ **Fault Category:** _____ **NCR:** Yes No **DQA:** _____ **Date:** _____

Resolution: _____ **Disposition:** _____ **QA: N/C Closed:** _____ **Date:** _____

NCR:		WORK ORDER NON-CONFORMANCE (NCR)						
DATE	STEP	Description of NC Section A	Corrective Action Section B			Verification Section C	Approval Chief Eng	Approval QC Inspector
			Initial Chief Eng	Action Description Chief Eng	Sign & Date			

NOTE: Date & initial all entries

H:\fFORMS\Quality Assurance\approved QA\NCRWO RevE